INSTRUCTION SHEET

BER0012
REDUCTION GEARBOX

APPLICATION

SA88, SA92-L and SA88TRC snowblowers

INSTALLATION

IMPORTANT: The reduction gearbox does not contain any oil. It must be filled with either SAE 80W90 oil, AGMA 5EP extreme pressure oil or the equivalent. If the reducer is operated without any oil the warranty will be nullified.

NOTE: Before proceeding with the installation, check the type of PTO on the tractor and if needed, order the appropriate yoke (Fig. 1, item 1) from your distributor.

1. Park the tractor on a flat surface, put in neutral, put on the parking brake, disengage the PTO, lower the snowblower to the ground, turn off the engine and remove the ignition key.
2. Remove the snowblower from the tractor.
3. **Figure 1:** To make installation easier, it is recommended to remove the upper hitch (item 2) as well as the left and right hitches (item 3).
4. **Figure 1:** Remove the driveline (item 4) from the snowblower. Remove the PTO protector (item 5).
5. **Figure 1:** On the SA88 and SA92-L models, remove the rear guard (item 6), which will no longer be used.
6. **Figure 1:** Before installing the reduction gearbox make sure the right and left lower hitches (item 7) are in the 1A position as shown on the figure. Check as well that the brace (item 8) on the SA88 and SA92-L is positioned in the exact position illustrated on the figure otherwise reinstall it in that position. For the TRC model, rotate the brace (item 9) 180º so the bent section faces the tractor and not the snowblower to prevent interference with the reduction gearbox.

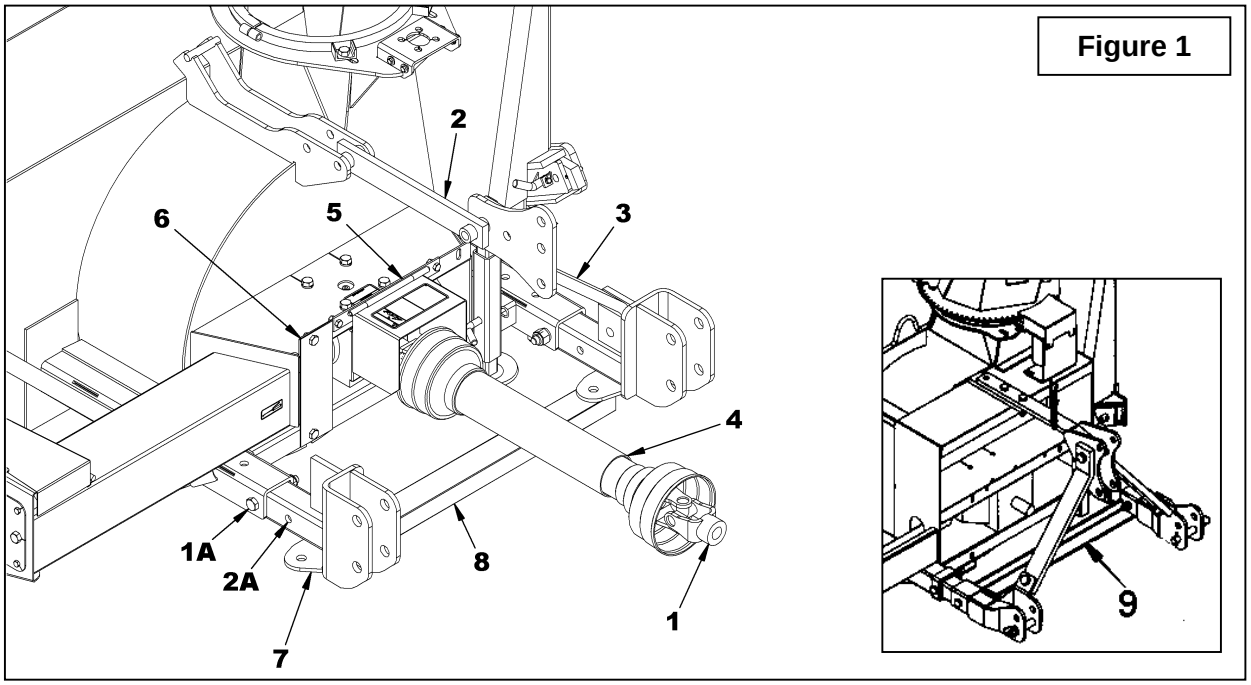

Figure 1

ATTENTION: The assembled reduction gearbox weights more than 100 lb; it is therefore recommended to install wooden blocks under the snowblower's input shaft (item 1) to support the reduction gearbox during installation.

7. **Figure 2:** Remove the 1/2" x 1" serrated flange nuts (item 2) and the 1/2" nuts (item 3) already installed on the support brackets (item 4).
8. **Figure 2:** Slightly loosen the six 1/2" nuts (item 5) holding the brackets (item 4) to the support (item 6).
9. **Figure 2:** Install the assembled gearbox on the snowblower carefully aligning the input shaft (item 1) with the gearbox shaft.
10. **Figure 2:** Make sure that the sides of the support brackets (item 4) are as vertical as possible and secure in place with the 1/2" x 1" serrated flange nuts (item 2) and the 1/2" nuts (item 3). Tighten the bolts at 88 ft-lb or 119 N-M.
11. **Figure 2:** Push the reduction gearbox towards the front of the snowblower until it rests completely against the snowblower and tighten the six 1/2" nuts (item 5) holding the brackets (item 4) to the support (item 6). Tighten the bolts at 88 ft-lb or 119 N-M.
12. **Figure 2:** Install the PTO guard (item 7) removed at step 4 with the same bolts and nuts.
13. **Figure 1:** Install the upper hitch (item 2) as well as the left and right hitches (item 3).

IMPORTANT: Before installing the driveline, it is very important to recheck its length to ensure it is not too long. This operation is necessary since the snowblower input shaft is now closer to the tractor. Refer to the snowblower's manual for more details.

14. Replace the M12 X 65 gr. 8 driveline shearbolt by a ø7/16" x 2 1/2" gr. 2.
15. Install the driveline on the snowblower.

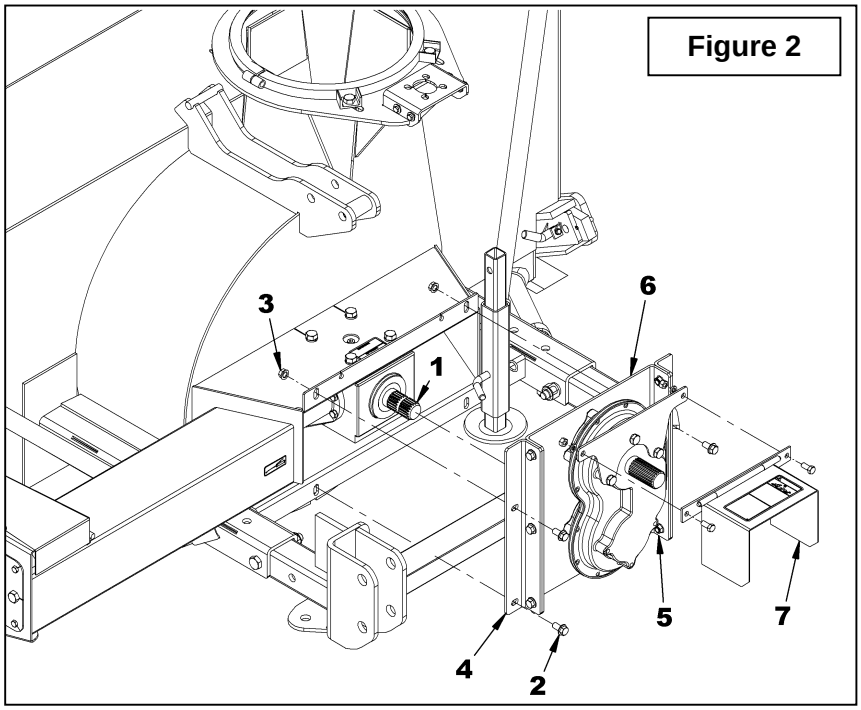

Figure 2

INSTRUCTION SHEET

BER0012
REDUCTION GEARBOX

PARTS

REF.	DESCRIPTION	QTY	PART#
1	Reduction gearbox 1000 @ 555 - 1 3/8" 6 splines	1	4500089
2	Driveline shield bracket	1	668397
3	Left support bracket	1	668673
4	Right support bracket	1	668672
5	Reduction gearbox support	1	668392
6	Lockwasher 1/2" PTD	9	O/L
7	Bolt hex. 1/2" NC x 1" gr.5 PTD	9	O/L
8	Bolt serrated flange 1/2" NC x 1" gr.5 PTD	10	O/L
9	Nut serrated flange 1/2" NC PTD	10	O/L

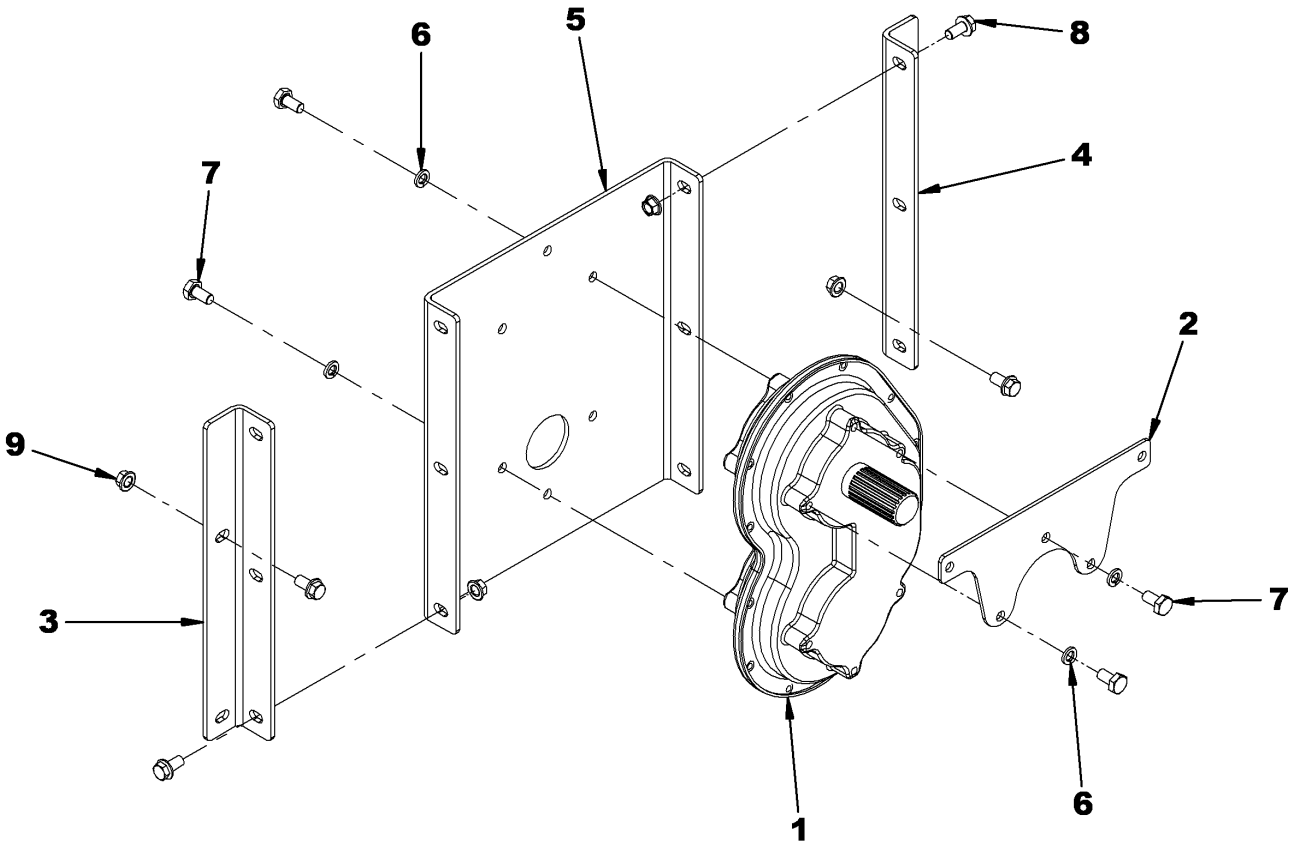

REDUCTION GEARBOX – 4500088
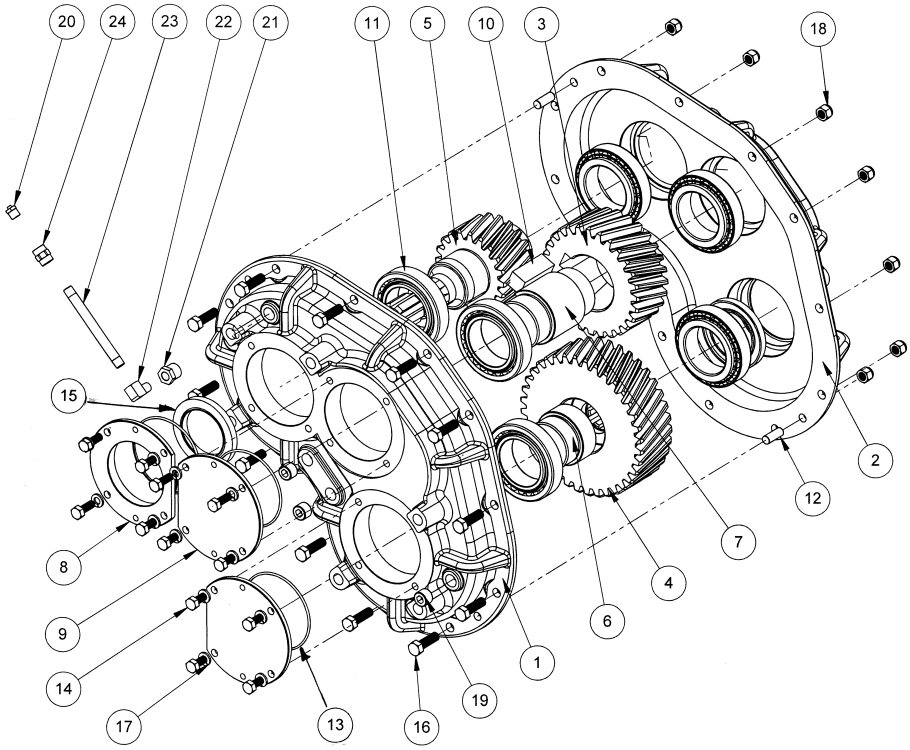
REF.	DESCRIPTION	QTY	PART #
1	Half casing	1	-----
2	Half casing	1	-----
3	Gear 28 teeth	1	4500090
4	Gear 36 teeth	1	4500113
5	Gear 20 teeth	1	4500114
6	Adaptor	1	4500093
7	Middle shaft	1	4500094
8	Open cap	1	4500095
9	Solid cap	2	4500096
10	Key 0.75" x 2"	1	4500097
11	Roller bearing with cap - metric	6	4300077
12	Pin 3/8" x 1"	2	4500098
13	O-ring	3	4300081
14	Bolt hex. 5/16" x 7/8"	12	O/L
15	Seal	2	4300079
16	Bolt hex. 3/8" x 1 1/2"	12	O/L
17	Lockwasher 5/16"	12	O/L
18	Stover nut 3/8"	12	O/L
19	Plug 3/8" NPT	2	661265
20	Breather 1/8	1	654927
21	Adapter 3/8" NPT - 1/8"NPTF	1	655317
22	Elbow 1/8"NPT x 1/8"NPTF	1	4500125
23	Nipple 1/8"NPT x 4"	1	4500126
24	Union 1/8"NPT	1	4500127